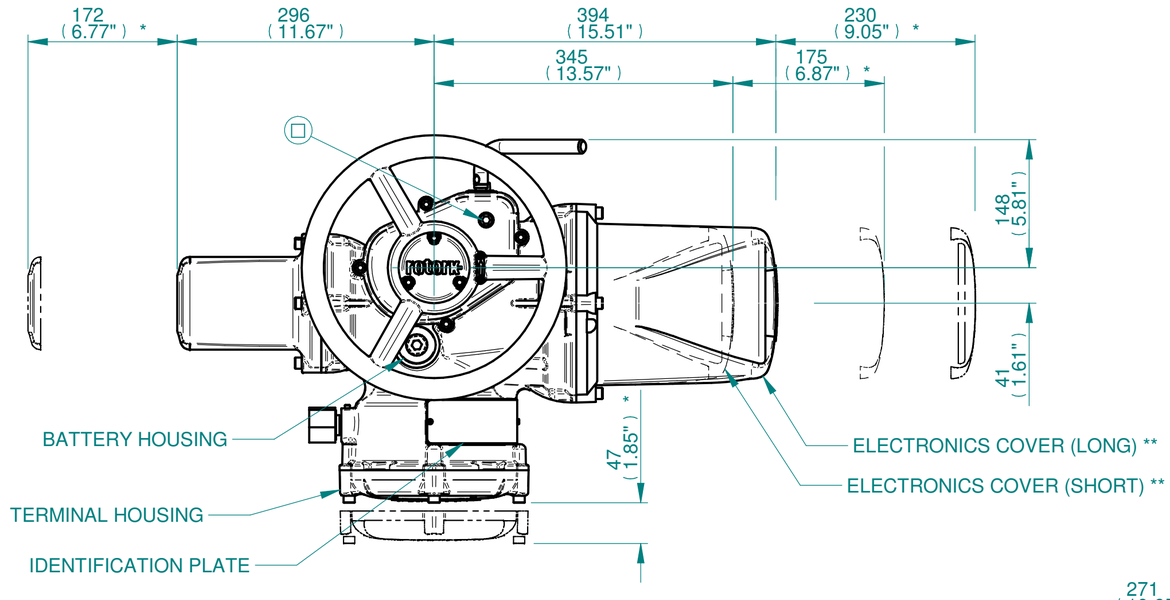

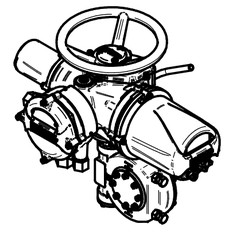

ISOMETRIC VIEW
(SCALE 1:12)

NOTES:

:DIMENSIONS WITH '*' INDICATE COVER REMOVAL ALLOWANCE

:ELECTRONICS COVER OPTION "**" WILL VARY DEPENDING ON CONFIGURATION

:NETT WEIGHT = 54kg/119lbs

: ⬚ = OIL FILLER/DRAIN PLUG

:THE INTERFACE PROVIDED FOR MOUNTING THE ACTUATOR OR SECOND STAGE GEARBOX ONTO THE VALVE SHOULD CONFORM TO GOOD ENGINEERING PRACTICES, ENSURING ADEQUATELY TOLERANCED LIMITS FOR PARALLELISM, PERPENDICULARITY AND CONCENTRICITY.

:ROTORK CANNOT BE HELD LIABLE FOR DAMAGE TO OUR EQUIPMENT CAUSED BY EXCESSIVE LOADING FROM COVER TUBES. (SEE ALSO PUB000-124)

CONDUIT ENTRIES

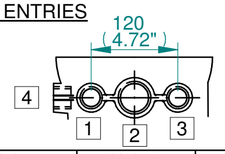

	Hole 1	Hole 2	Hole 3	Hole 4
Size	As Required	As Required	As Required	As Required
Plugged	As Required	As Required	As Required	As Required
Gland	As Required	As Required	As Required	As Required

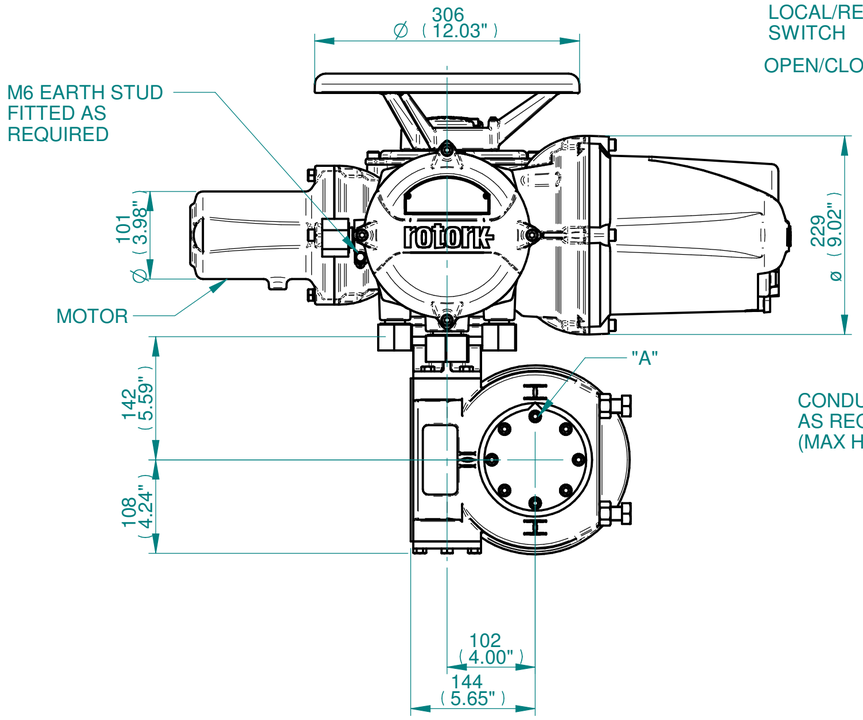

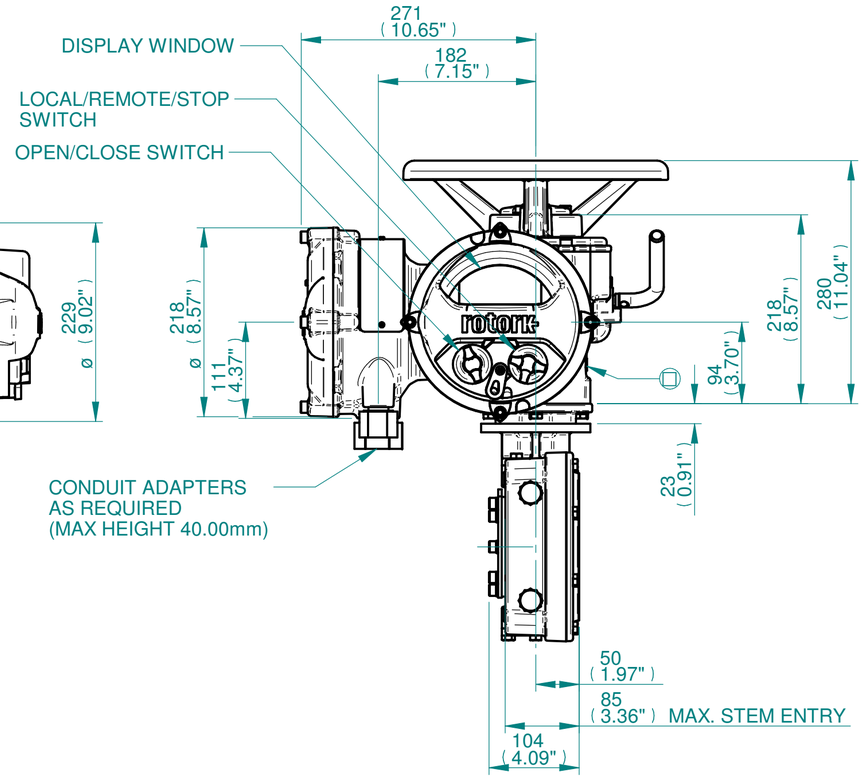

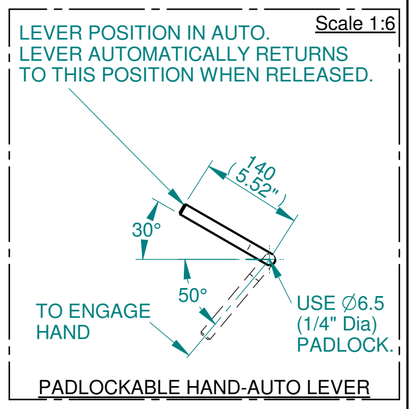

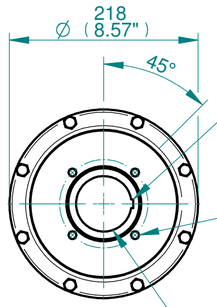

N.B. KEYWAY POS. CAN BE MOVED IN 45° STEPS BY REMOVING 8 SCREWS MARKED "A" AND ROTATING OUTPUT SLEEVE

SEE GEARBOX OUTPUT FLANGE OPTIONS TABLE

SEE MAXIMUM BORE & KEY TABLE

3D Models are available in various formats under the same drawing number

Gearbox output flange options

Designation	F12	F14	F16	-	FA12	FA14	FA16	-
No. Holes	4	4	4	-	4	4	4	-
Hole size	M12	M16	M20	-	1/2" UNC	5/8" UNC	3/4" UNC	-
PCD	125	140	165	-	4.95"	5.5"	6.5"	-

Maximum Bore & Key

Key form	∅ Bore	Key size
Rectangle (BS4235)	64	18 X 11
Rectangle (ANSI B17.1)	2-1/2"	5/8 X 7/16"
Square (ANSI B17.1)	2-1/4"	1/2" SQ

Actuator Size: IQ10/12/18 IW4/MOW4

Title IQ10/12/18, TOP HANDWHEEL, IW4 / MOW4, F/FA12,14 & 16, Ratios 40,46 & 70:1 Installation Details

Drawn TED Checked NJC Date 18-AUG-14

Ref SALES Project Ref QUOTATION

rotork
www.rotork.com
Rotork Controls Limited
Bath, BA1 3JQ, England.
Telephone 01225-733200

Issue	Description
3	OUTPUT FLANGE CHANGE

Scale: 1:5 THIRD ANGLE PROJECTION

A2	Drawing Number	Issue No	Sheet No
	II1THWIW4STD	3	1 of 1