INPUT FLANGE DETAILS							MOUNTING HOLES - BOLT CIRCLE (OFF CENTRES)								
INPUT FLANGE	FLANGE O/DIA. + THICKNESS	SHAFT DIA.	RECESS DIA.	RECESS DEPTH	HOLE DETAILS (OFF CENTRES)	KEY DETAILS	ISO 5211 / MSS SP-101 MOUNTING OPTION	HOLE DETAILS (45° OFF CENTRES)	STANDARD	MIN BORE	SQ KEY MAX BORE	SQ KEY SIZE	RECT. KEY MAX BORE	RECT. KEY SIZE	SQ BORE MAX
-	-	Ø20.00-0.05 (Ø0.787"-0.002")	-	-	-	6x6x40 (0.24"x0.24"x1.57")	ISO F14*	4 x M16 x 16 (0.63") DEEP ON Ø140.0 (Ø5.51") P.C.	BS4235	-	-	-	76.0	22 x 14	□ 62.0 (2.44")
									BS46	-	2.75"	3/4" SQ.	3.00"	3/4" x 1/2"	
							FA14*	4 x 5/8" UNC x 16 (0.63") DEEP ON Ø139.7 (Ø5.50") P.C.	ANSI B17.1	-	2.75"	5/8" SQ.	3.00"	3/4" x 1/2"	
									DIN 6885	-	-	-	76.0	22 x 14	

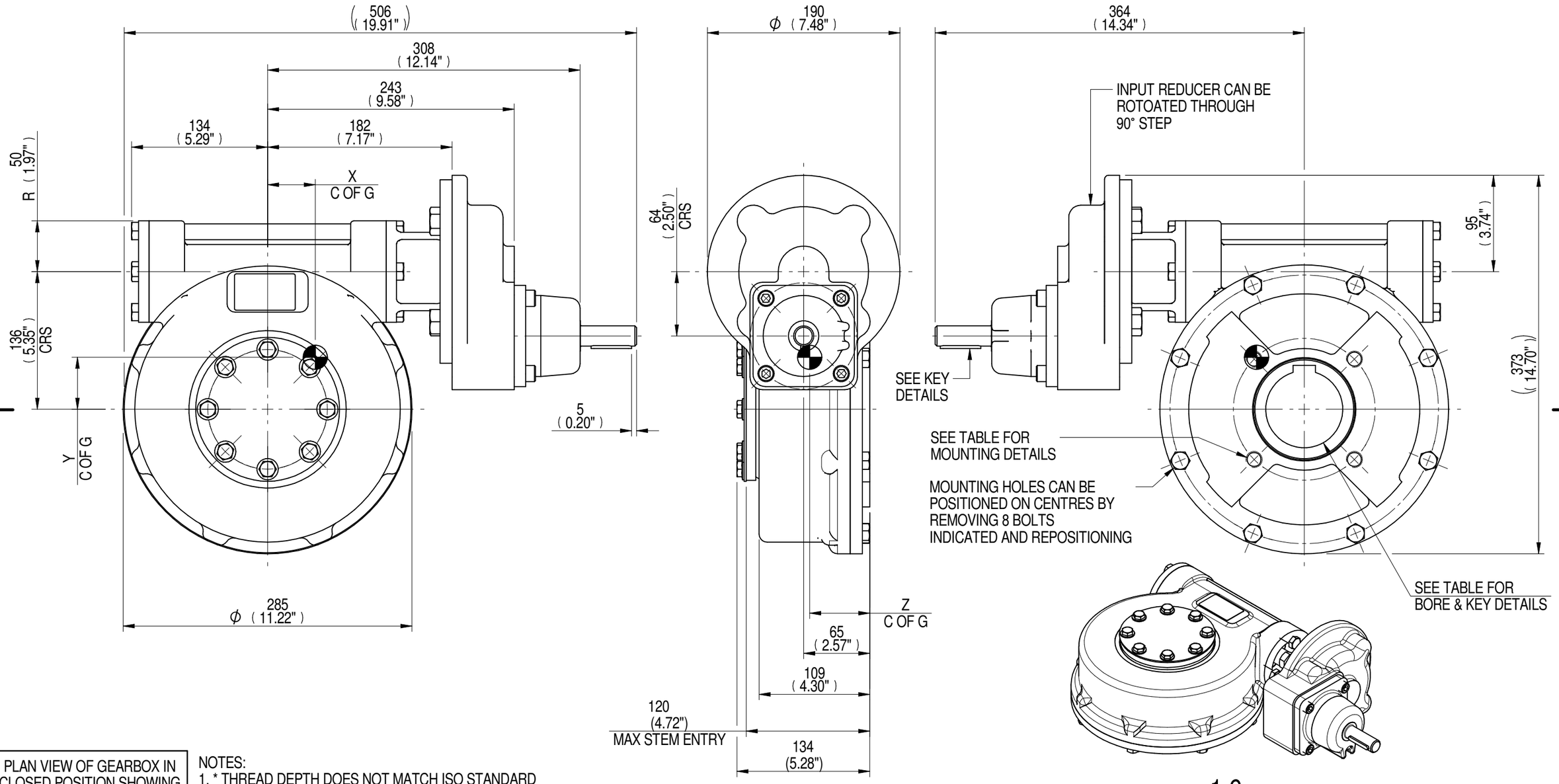

PLAN VIEW OF GEARBOX IN CLOSED POSITION SHOWING STANDARD KEYWAY POSITIONS. ALTERNATIVES AVAILABLE ON REQUEST

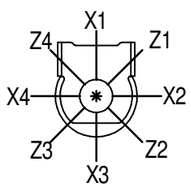

NOTES:
1. * THREAD DEPTH DOES NOT MATCH ISO STANDARD
2. CENTRE OF GRAVITY POSITION IS INDICATIVE FOR STANDARD BUILD WHEN IN POSITION SHOWN

RATIO	M.A. ± 10%	WEIGHT (Kg)	MAX OUTPUT (Nm)	MAX INPUT (Nm)	X	Y	Z
280	88	47	3118	35	48	52	59
210	66	47	3118	47	47	51	59
160	65	49	3118	48	46	50	60
140	44	46	3118	71	46	51	59
120	48	49	3118	65	45	50	60
80	32	48	3118	97	44	49	60
DESCRIPTION			TORQUE		CENTRE OF GRAVITY		

AS PART OF CONTINUOUS PRODUCT DEVELOPMENT, ALL DETAILS SUBJECT TO CHANGE WITHOUT PRIOR NOTICE. FOR UP TO DATE DETAILS PLEASE VISIT www.rotork.com

rotork® Gears
LEEDS - UK
www.rotork.com

This drawing is confidential and is the property of Rotork Gears and must not be reproduced either wholly or partly. All rights in respect of patents, designs and copyrights are reserved. ©2015

Document Type **PUBLICITY**
Dimensions in mm

Title
MTW5 MULTI-TURN GEARBOX, 80/120/140/160/210/280:1 MANUAL INPUT, F14/FA14 OUTPUT

Drawing Number
PUB-MTW5IRS-MAN-F14
Iss. 01

Sheet **1** of **1** Size A3

Rev 05