INPUT FLANGE DETAILS							MOUNTING HOLES - BOLT CIRCLE (OFF CENTRES)								
INPUT FLANGE	FLANGE O/DIA. + THICKNESS	SHAFT DIA.	RECESS DIA.	RECESS DEPTH	HOLE DETAILS (OFF CENTRES)	KEY DETAILS	ISO 5211 / MSS SP-101 MOUNTING OPTION	HOLE DETAILS (45° OFF CENTRES)	STANDARD	MIN BORE	SQ KEY MAX BORE	SQ KEY SIZE	RECT. KEY MAX BORE	RECT. KEY SIZE	SQ BORE MAX
-	-	Ø20.00-0.05 (Ø0.787"-0.002")	-	-	-	6x6x40 (0.24"x0.24"x1.57")	ISO F16*	4 x M20 x 16 (0.63") DEEP ON Ø165.0 (Ø6.50") P.C.	BS4235	-	-	-	76.0	22 x 14	□ 62.0 (2.44")
									BS46	-	2.75"	3/4" SQ.	3.00"	3/4" x 1/2"	
							FA16*	4 x 3/4" UNC x 16 (0.63") DEEP ON Ø165.0 (Ø6.50") P.C.	ANSI B17.1	-	2.75"	5/8" SQ.	3.00"	3/4" x 1/2"	
									DIN 6885	-	-	-	76.0	22 x 14	

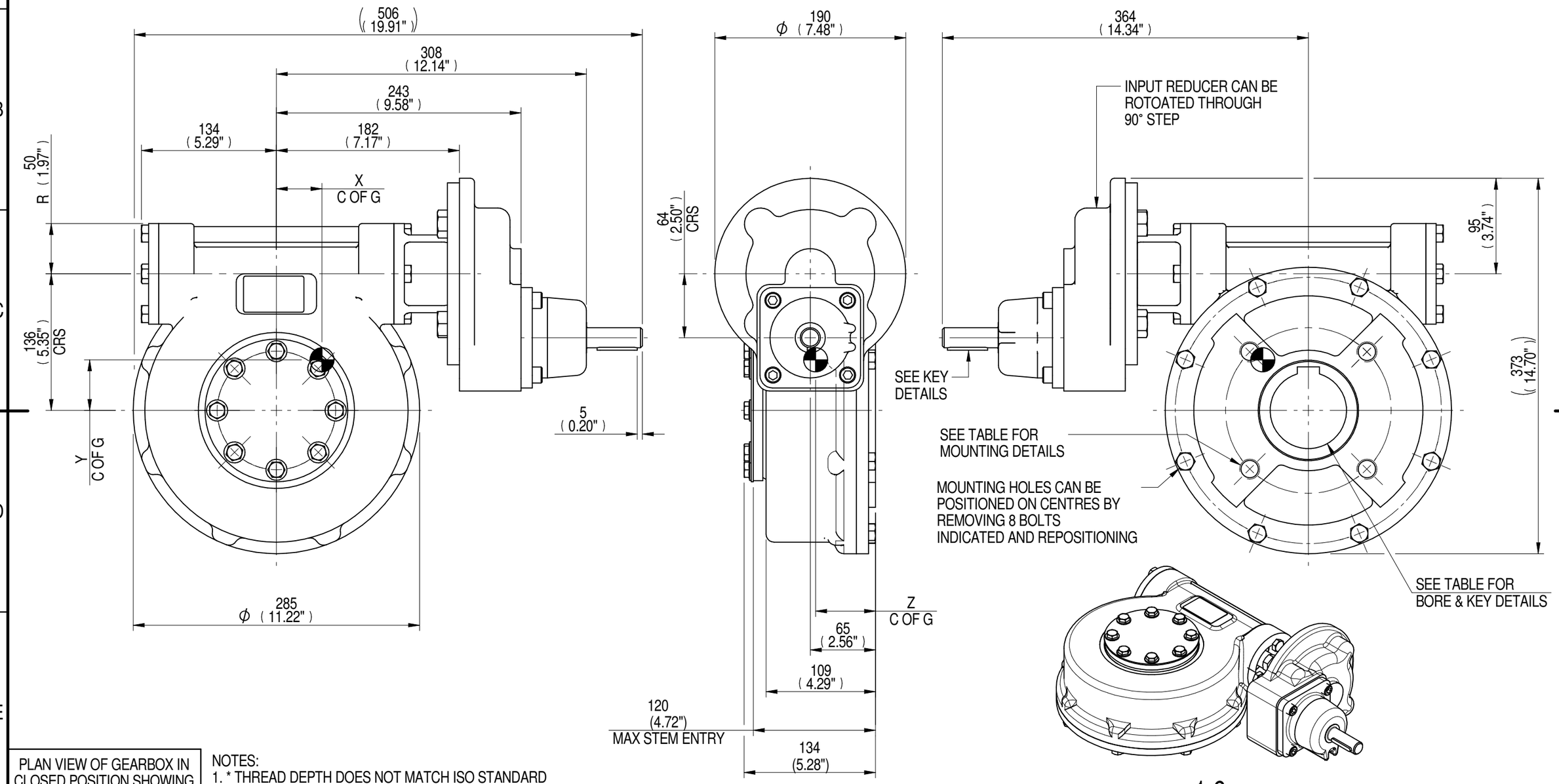

PLAN VIEW OF GEARBOX IN CLOSED POSITION SHOWING STANDARD KEYWAY POSITIONS. ALTERNATIVES AVAILABLE ON REQUEST

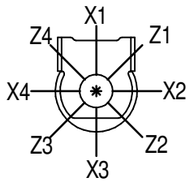

NOTES:
1. * THREAD DEPTH DOES NOT MATCH ISO STANDARD
2. CENTRE OF GRAVITY POSITION IS INDICATIVE FOR STANDARD BUILD WHEN IN POSITION SHOWN

DESCRIPTION			TORQUE		CENTRE OF GRAVITY		
RATIO	M.A. ± 10%	WEIGHT (Kg)	MAX OUTPUT (Nm)	MAX INPUT (Nm)	X	Y	Z
280	88	46	3118	35	48	52	59
210	66	46	3118	47	47	52	59
160	65	48	3118	48	46	51	60
140	44	46	3118	71	47	51	59
120	48	48	3118	65	45	50	60
80	32	48	3118	97	45	50	60

AS PART OF CONTINUOUS PRODUCT DEVELOPMENT, ALL DETAILS SUBJECT TO CHANGE WITHOUT PRIOR NOTICE. FOR UP TO DATE DETAILS PLEASE VISIT www.rotork.com

rotork® Gears
LEEDS - UK
www.rotork.com

This drawing is confidential and is the property of Rotork Gears and must not be reproduced either wholly or partly. All rights in respect of patents, designs and copyrights are reserved. ©2015

Document Type **PUBLICITY**
Dimensions in mm

Title
MTW5 MULTI-TURN GEARBOX, 80/120/140/160/210/280:1 MANUAL INPUT, F16/FA16 OUTPUT

Drawing Number
PUB-MTW5IRS-MAN-F16
Iss. 01

Sheet **1** of **1** Size A3

Rev 05