CIRCUIT IS DRAWN FOR A VALVE IN THE FULLY CLOSED POSITION

Circuit Diagram No - Issue No

1P02Q70 - 6

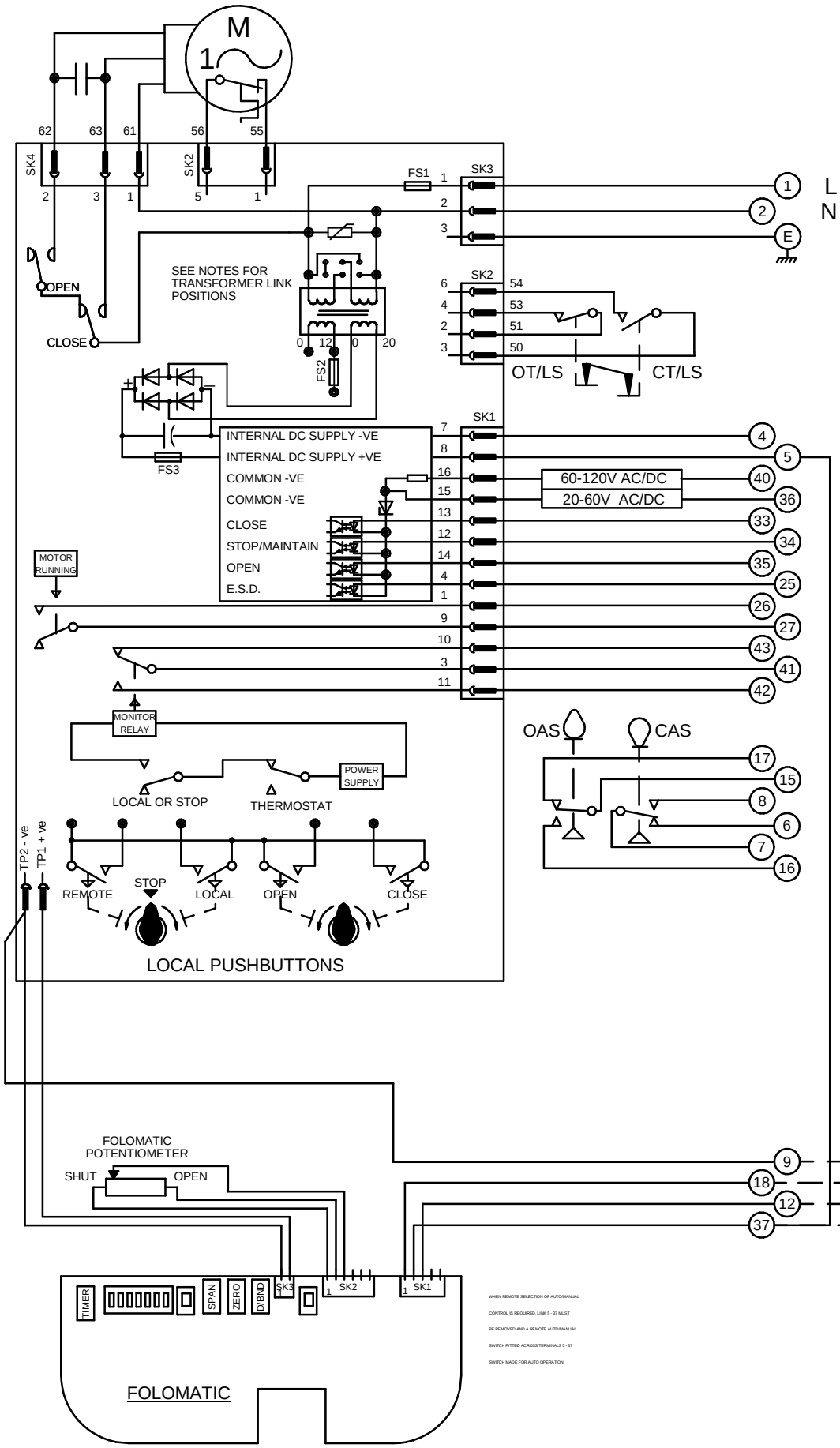


TRANSFORMER VOLTAGE SELECTION

230V

SET SWITCH AS ABOVE FOR 198V - 264V SUPPLIES

115V

SET SWITCH AS ABOVE FOR 99V - 132V SUPPLIES

OT/LS - OPEN TORQUE/LIMIT SWITCH.

CT/LS - CLOSE TORQUE/LIMIT SWITCH.

OAS - OPEN AUXILIARY SWITCH.

CAS - CLOSE AUXILIARY SWITCH.

WIRES ARE IDENTIFIED AT EACH END BY TERMINAL NUMBER OR NUMBER SHOWN.

FS1 - 6.3A

FS2 - 250mA

FS3 - 160mA

TERMINALS 4 & 5 FUSED INTERNALLY AT 160mA

E.S.D. CONTROL SIGNAL VOLTAGE MUST BE EQUAL TO OR GREATER THAN ALL OTHER CONTROL SIGNAL VOLTAGES.

| Iss | Date | Chkd | Revision Details |
|---|---|---|---|
| 05 | 110294 | T.W | SIMILAR TO 1P02Q70 JOB NO --- AUTO/MANUAL MOD P2269 CHECKED K.S. |
| 06 | 270417 | JS | FUSE RATING & TRANSFORMER VOLTAGE SELECTION CHANGED AS PER NEW PCB ECN / 7023 |

www.rotork.com

ROTORK CONTROLS LTD
BATH, BA1 3JQ
ENGLAND
Tel:01225-733200

ROTORK CONTROLS INC
ROCHESTER
NY 14624, USA
Tel:585-247-2304

Q-PAK + POTENTIOMETER. + FOLOMATIC

Drawn by: P.W.
Date : 230590
Base WD: 1P02Q70
Job No : --
MI No : .

Circuit Diagram No 1P02Q70

Issue No 6