ACTUATOR: M15SD

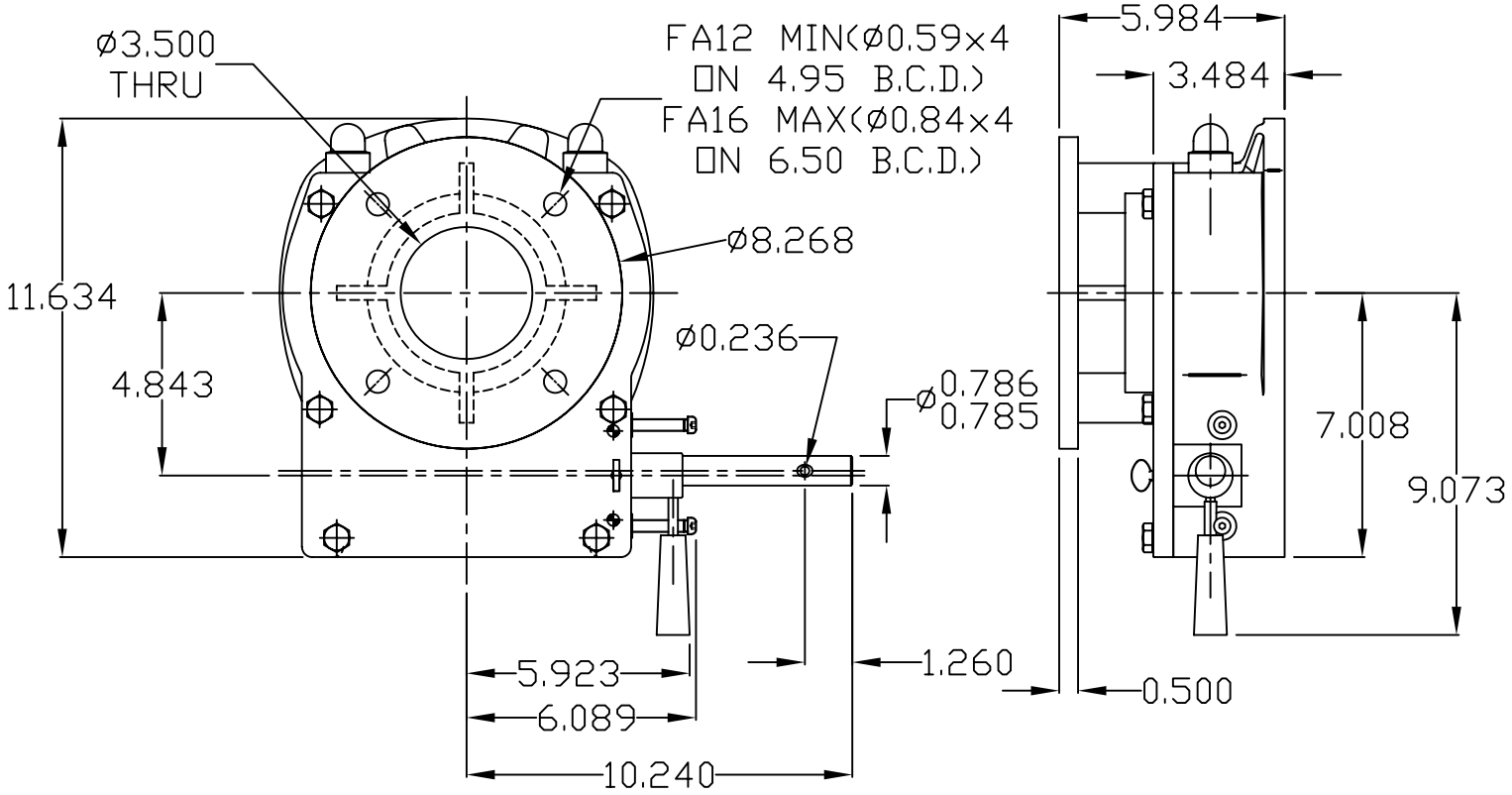

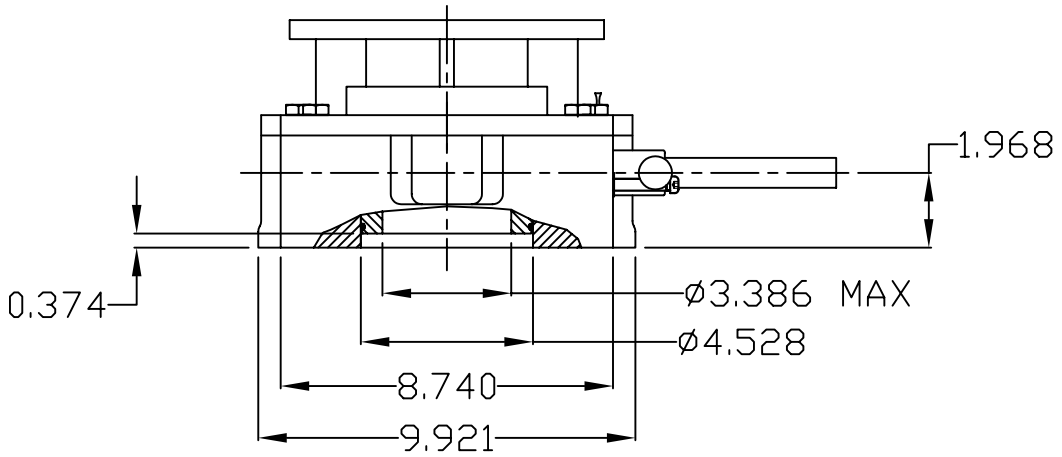

GENERAL INFORMATION

TRAVEL.....90° ±10° AT BOTH ENDS
RATIO.....84.1
TURNS TO CLOSE.21

MECHANICAL ADVANTAGE.....22.7 ±10%
OUTPUT TORQUE(1000 CYCLES)..36080 IN-LBS
INPUT TORQUE(1000 CYCLES).....1589 IN-LBS

MOUNTING HOLE DETAIL: PREFERRED....FA16 (4 x 3/4-10 ON 6.50" BCD)
(MSS SP-101) MAXIMUM.....FA16
MINIMUM.....FA14 (4 x 5/8-11 ON 5.50" BCD)

MASTERGEAR
A REGAL-BELOIT COMPANY
5466 EAST ROCKTON RD. · SOUTH BELOIT, IL 61080

DIMENSIONS IN INCHES	SCALE	DRAWING No.
	1:5	M15SD

THIS PRINT IS CONFIDENTIAL AND IS THE PROPERTY OF MASTERGEAR. THIS PRINT SHALL NOT BE USED, COPIED OR REPRODUCED IN WHOLE OR IN PART NOR SHALL THE CONTENTS BE REVEALED IN ANY MANNER TO ANYONE UNLESS WRITTEN PERMISSION IS OBTAINED FROM MASTERGEAR. ©

NJC

REV. B
9/8/05