rotork®

Keeping the World Flowing
for Future Generations

IW Quarter-turn

Sizes 14 - 17 Ductile Iron
Housing Gearboxes

IW Quarter-turn Gearbox Series Sizes 14 - 17

The IW14 and above large worm gearbox operators have been designed for very high torques in isolating duty motorised applications with low or no maintenance requirements.

The gearbox input can be from either the left or right side and caters for both clockwise and anti-clockwise valve operating directions. Gearbox input and output flanges are designed with reference to ISO 5211. MSS SP-101 and non-standard options are also available.

Application

The IW series gearboxes are quarter-turn operators intended for the operation of quarter-turn ball, butterfly and plug valves and any other quarter-turn device requiring a reduction for its operation. They are used mainly for motorised applications but can also be used manually or with power tools.

Features

- Heat treated and ground worm gear supported by taper roller bearings. Ground shims used to minimise backlash and improve accuracy in the gear system
- Ductile iron housing
- Grease filled for life and fully sealed with o-rings
- Comprehensive gear ratio with combination spur and planetary gear reducers
- Adjustable mechanical stops at 0° and 90° +/- 5°

Environmental specification

- IP67 enclosure
- -20 to +80 °C

Options

- IP68 enclosure (1.1 metres for 40 minutes)
- High and low temperature
- Padlockable kits
- Limit switches
- All types of environments
- Flexible extensions

Material Specification for Rotork IW Series Quarter-turn Gearbox Series Sizes 14 - 17

No.	Description	Material	Notes
1	Body	Ductile Iron	EN-GJS-400-18
2	Quadrant	Ductile Iron	EN-GJS-500-7
3	Worm Screw	Alloy Steel	18 NiCrMo 5 Pb
4	Position Indicator	Steel	S275JR
5	Cover Plate	Ductile Iron	EN-GJS-400-12
6	Tapered Roller Bearings	Carbon Steel	-
7	Radial Ball Bearings	Carbon Steel	-
8	O-ring Seal	Nitrile Rubber	-
9	Stop Bolt	Steel	GR B7
10	Spur Gear	Carbon Steel	C45
11	Spur Body	Ductile Iron	EN-GJS-400-12
12	Input Shaft	Alloy Steel	39 NiCrMo3
13	Spur Body cover	Ductile Iron	EN-GJS-400-12
14	Fasteners	Carbon Steel	-

Note: Because of the company's policy of continuous improvement, Rotork reserves the right to change specification details without prior notice.

Gearbox IW Series Sizes 14 - 17

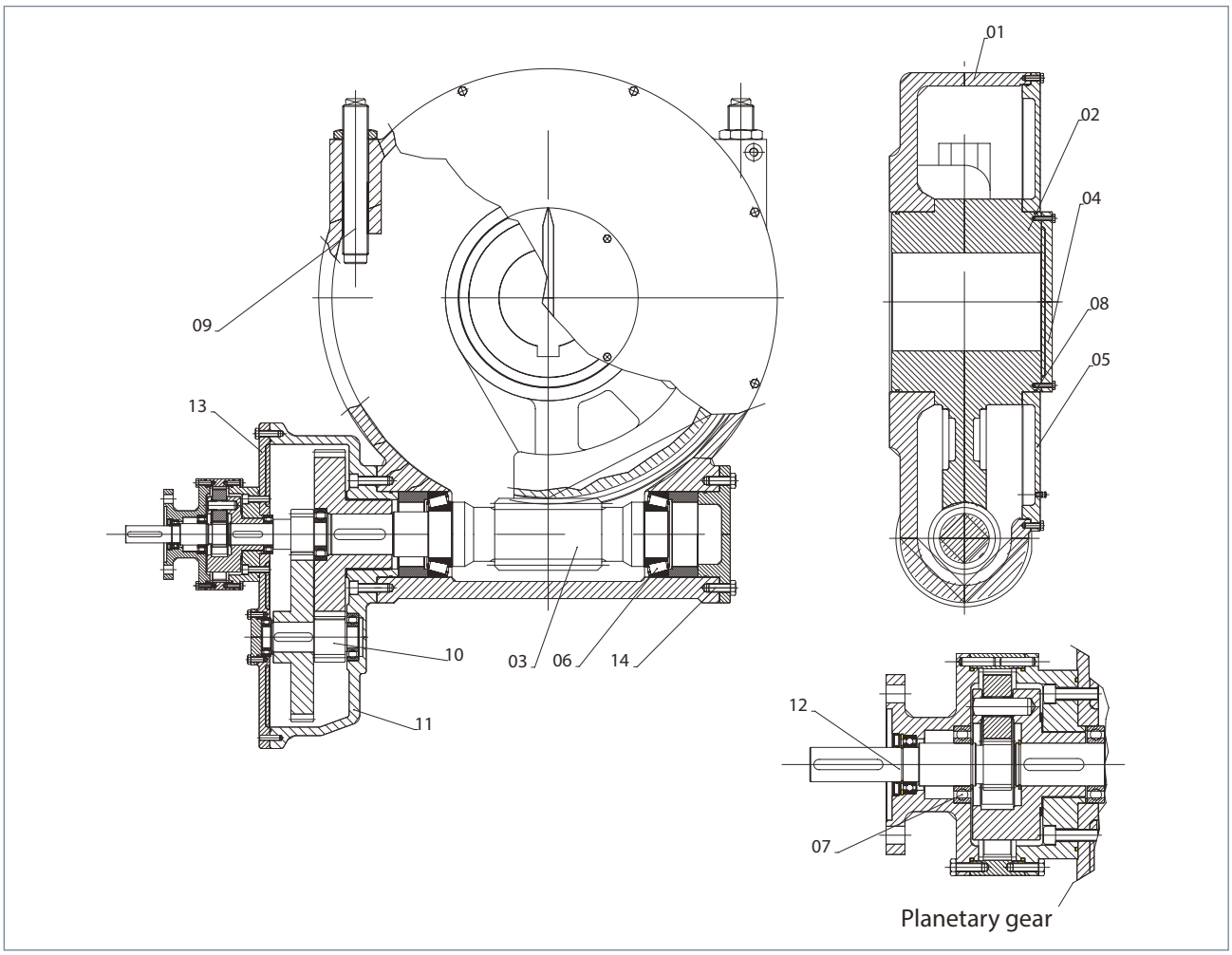

IW Quarter-turn Sizes 14 - 17 Ductile Iron Housing Gearboxes

Dimensional Data

Gearbox Size	ØA	B	D	E	G	H	I	ØK	M	Weight (kg)
IW14	1070	552	749	809	355	175	520	680	500	1800
IW14 R1	1070	552	825	879	355	175	520	680	500	1900
IW14 R2	1070	552	825	879	355	175	520	680	500	1900
IW14 R3	1070	552	868	978	355	175	520	680	500	1900
IW15	1070	552	749	809	355	175	520	680	500	1880
IW15 R1	1070	552	825	879	355	175	520	680	500	1980
IW15 R2	1070	552	825	879	355	175	520	680	500	1980
IW15 R3	1070	552	868	978	355	175	520	680	500	1980
IW16	1255	660	935	1045	425	209	610	750	605	2980
IW16 R1	1255	660	1081	1135	425	209	610	750	605	3080
IW16 R2	1255	660	1081	1135	425	209	610	750	605	3080
IW16 R3	1255	660	1086	1196	425	209	610	750	605	3080
IW17	1255	660	935	1045	425	209	610	750	605	3080
IW17 R1	1255	660	1081	1135	425	209	610	750	605	3180
IW17 R2	1255	660	1081	1135	425	209	610	750	605	3180
IW17 R3	1255	660	1086	1196	425	209	610	750	605	3180

All dimensions in millimetres. Contents may change without previous notice.

Worm Gearbox without secondary auxiliary gearbox

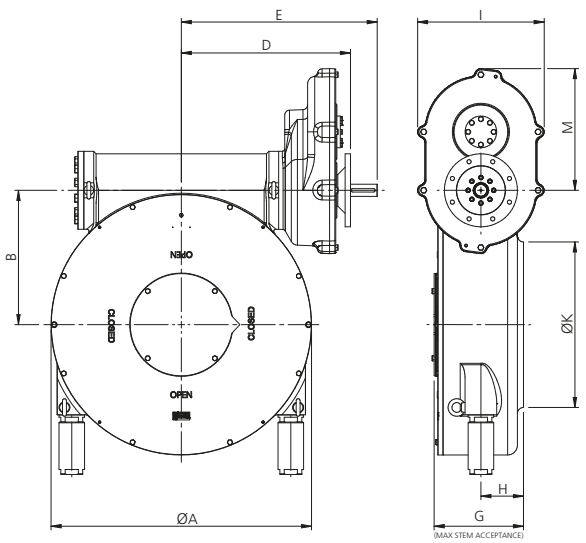

Worm Gearbox with secondary auxiliary gearbox

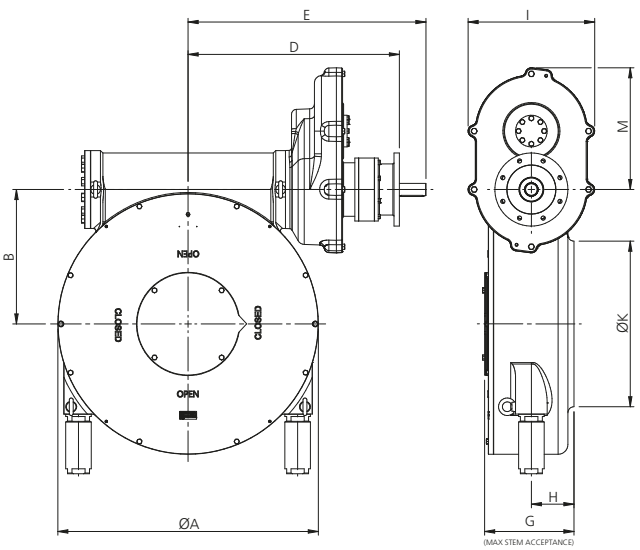

IW Quarter-turn

Sizes 14 - 17 Ductile Iron Housing Gearboxes

Standard Inputs and Outputs

Gearbox Model	Ratio :1	Input Mounting Details				Output Mounting Details					
		F14 / FA14	F16 / FA16	F25 / FA25	F30 / FA30	Min Bore Rectangle Key BS4235	Max Bore Rectangle Key BS4235	Min Square Bore A/F	Max Square Bore A/F	ISO Flange Standard Baseplate	Max Thread Depth (mm)
IW14	320 to 1280	30	40	50	50	180	350	130	247	F/FA 48 - 60	54
IW14 R1	2400 to 9600	30	40	50	50	180	350	130	247	F/FA 48 - 60	54
IW14 R2	1536 to 6144	30	40	50	50	180	350	130	247	F/FA 48 - 60	54
IW14 R3	1600 to 6400	30	40	50	50	180	350	130	247	F/FA 48 - 60	54
IW15	272 to 1088	30	40	50	50	180	350	130	247	F/FA 48 - 60	54
IW15 R1	2040 to 8160	30	40	50	50	180	350	130	247	F/FA 48 - 60	54
IW15 R2	1306 to 5222	30	40	50	50	180	350	130	247	F/FA 48 - 60	54
IW15 R3	1360 to 5440	30	40	50	50	180	350	130	247	F/FA 48 - 60	54
IW16	248 to 992	-	-	50	50	200	385	160	275	F/FA60 or Larger	40 (F/FA60), 42 (F/FA80)
IW16 R1	1860 to 7440	30	40	50	50	200	385	160	275	F/FA60 or Larger	40 (F/FA60), 42 (F/FA80)
IW16 R2	1190 to 4762	30	40	50	50	200	385	160	275	F/FA60 or Larger	40 (F/FA60), 42 (F/FA80)
IW16 R3	1240 to 4960	30	40	50	50	200	385	160	275	F/FA60 or Larger	40 (F/FA60), 42 (F/FA80)
IW17	220 to 880	-	-	50	50	200	385	160	275	F/FA60 or Larger	40 (F/FA60), 42 (F/FA80)
IW17 R1	1650 to 6600	30	40	50	50	200	385	160	275	F/FA60 or Larger	40 (F/FA60), 42 (F/FA80)
IW17 R2	1056 to 4224	30	40	50	50	200	385	160	275	F/FA60 or Larger	40 (F/FA60), 42 (F/FA80)
IW17 R3	1100 to 4400	30	40	50	50	200	385	160	275	F/FA60 or Larger	40 (F/FA60), 42 (F/FA80)

The table above details the standard maximum thread depths for attaching to the baseplate. Longer thread depths are available on request.

Gearbox Sizing Data

Gearbox Model	Ratios	Mechanical Advantage ±10%*	Max. Input Torque (Nm)	Max. Output Torque 7000 Cycles (Nm)	Max. Output Torque 1000 Cycles (Nm)
IW14	320 to 1280	107 to 427	2804 to 703	250,000	300,000
IW14 R1	2400 to 9600	761 to 3045	394 to 99	250,000	300,000
IW14 R2	1536 to 6144	487 to 1949	616 to 154	250,000	300,000
IW14 R3	1600 to 6400	508 to 2030	591 to 148	250,000	300,000
IW15	272 to 1088	96 to 383	3750 to 940	300,000	360,000
IW15 R1	2040 to 8160	682 to 2729	528 to 132	300,000	360,000
IW15 R2	1306 to 5222	437 to 1747	824 to 206	300,000	360,000
IW15 R3	1360 to 5440	508 to 2030	709 to 177	300,000	360,000
IW16	248 to 992	90 to 358	6667 to 1676	500,000	600,000
IW16 R1	1860 to 7440	638 to 2552	940 to 235	500,000	600,000
IW16 R2	1190 to 4762	408 to 1633	1471 to 367	500,000	600,000
IW16 R3	1240 to 4960	425 to 1701	1412 to 353	500,000	600,000
IW17	220 to 880	81 to 326	10494 to 2607	750,000	850,000
IW17 R1	1650 to 6600	583 to 2331	1458 to 365	750,000	850,000
IW17 R2	1056 to 4224	373 to 1492	2279 to 570	750,000	850,000
IW17 R3	1100 to 4400	389 to 1554	2185 to 547	750,000	850,000

*The published M.A. is achieved after a few cycles. More ratios are available.

A full listing of the Rotork sales and service network is available on our website.

www.rotork.com

Corporate Headquarters
Rotork plc
tel +44 (0)1225 733200
email mail@rotork.com

Rotork Gears UK
tel +44 (0)113 256 7922
email sales@rotorkgears.com

Electric Actuators and Control Systems
Fluid Power Actuators and Control Systems
Gearboxes and Gear Operators
Precision Control and Indication
Projects, Services and Retrofit

PUB029-001-00
Issue 07/23

As part of a process of on-going product development, Rotork reserves the right to amend and change specifications without prior notice. Published data may be subject to change. For the very latest version release, visit our website at www.rotork.com

The name Rotork is a registered trademark. Rotork recognises all registered trademarks. Published and produced in the UK by Rotork. POLTG0723