E.CK00035-5

TITLE: MULTI-TURN ACTUATORS. OUTPUT DRIVES AND VALVE ATTACHEMENT
MODELS: CK, CKR, CKC, CKRC

Output drives	Dimensions	CK SERIES Multi-turn electric actuator models			
		CK30 CK60 CKR30 CKR60		CK120 CKR120	CK250 CK500 CKR250 CKR500
Stem nut (A type, thrust base)	**ISO 5210**	**F07**	**F10**	**F10**	**F14**
Type EN ISO 5210 A DIN 3210 A	A	62	45	59,5	83
	B	12	18	18	28
	C	2,5	2,5	2,5	3
	ØD1	130	130	130	191
	ØD2	70	102	102	140
	ØD3	55	70	70	100
	ØD4	26	34	40	57
	ØD5	42	42	42	59
	n	4	4	4	4
	Z	M8	M10	M10	M16
Arrangement of holes Z	Weight (kg)	3,5	3	4	10,5
Dog coupling	B	15	15	15	24
	C	4,5	4,5	3,5	3,5
	E	14	14	14	20
	G	9	9	10	13
	ØD7	54	54	54	85
	ØD8	42	42	42	60
	Weight (kg)	Weight included in actuator			
	Missing dimensions refer to output drive A				
Bore with keyway (B type)	B	12	15	15	24
	C	12	4,5	3,5	3,5
	H	40	40	40	65
	Ø D10 H9	28	42	42	60
	Ø dy H9	25	28	28	42
	b JS9	8	12	12	18
	d	31,3	45,5	45,5	64,4
	Weight (kg)	Weight included in actuator			
	EN ISO 5210 B1 = øD10 EN ISO 5210 B2 ≤ ødy Bore and keyway (b,d) dimensions, depend on Ø diameter, refer to DIN 6885 Missing dimensions refer to output drive A				
Drive (plug) sleeve (B type)	B	12	15	15	24
	C	5,5	3,5	3,5	3,5
	H	46	40	40	65
	Ø D9 H9	16	20	20	30
	Ø dy H9	25	28	28	42
	b JS9	5	6	6	8
	d	18,3	22,8	22,8	33,3
	Weight (kg)	0,4	0,4	0,4	1,3
	EN ISO 5210 B3 = ØD9 EN ISO 5210 B4 ≤ ødy Bore and keyway (b,d) dimensions, depend on Ø diameter, refer to DIN 6885 Missing dimensions refer to output drive A				

Rotork Controls. All rights reserved. Subject to change without notice. Previous data sheets invalid with the issue of the latest data sheets. Due to production tolerance variation, the electrical values shown are averages compiled from Actuator production test data. Values are therefore provided for guidance only. Individual production tests are available on request (nominal load not included). Rotork Controls underwrite rated torque output only (specified tolerance -0/+10%)

Output drives according to EN ISO 5210. Dimensions, in millimeters. Keyway dimensions according to DIN6885.

Output drives	Dimensions	CK SERIES Multi-turn electric actuator models			
		CK30 CK60 CKR30 CKR60		CK120 CKR120	CK250 CK500 CKR250 CKR500
Bore with keyway (Z3 type) 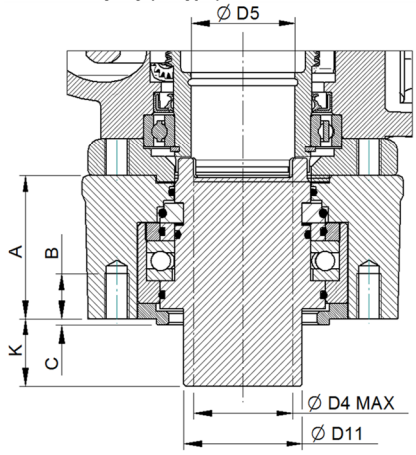	A	60	42	57	80
	B	12	18	18	28
	C	2,5	2,5	2,5	3
	K	30	40	40	64
	Ø D4	26	34	40	57
	Ø D5	42	42	42	59
	Ø D11	34	43	48	76
	Weight (kg)	3,8	3,1	4,1	12,2
	Missing dimensions refer to output drive A				
Drive Shaft (B3D type) 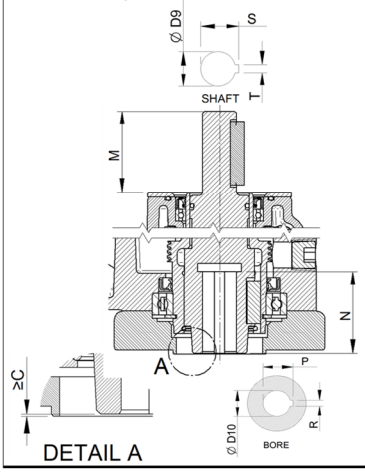	M	48	48	59	59
	N	48	48	58	58
	Ø D9	20	20	20	30
	Ø D10	20	20	20	30
	P	22,5	22,5	22,5	33
	R	6	6	6	8
	T	6	6	6	8
	S	22,8	22,8	22,8	33,5
	Weight (kg)	1,6	1,6	2,3	5,1
	Missing dimensions refer to output drive A				

All CK range actuators have a B1 output drive type as standard. B3 and B4 are available through the use of adapter sleeves designed to mate with the standard B1 coupling. The A type drive assembly is supplied as a self-contained cartridge assembly, facilitating quick removal and reassembly. Other valve attachments under request. Contact with Rotork

Rotork Controls. All rights reserved. Subject to change without notice. Previous data sheets invalid with the issue of the latest data sheets. Due to production tolerance variation, the electrical values shown are averages compiled from Actuator production test data. Values are therefore provided for guidance only. Individual production tests are available on request (nominal load not included). Rotork Controls underwrite rated torque output only (specified tolerance -0/+10%)