RCG90–100

Pneumatic actuators

TYPE AND DESIGN

DA = Double acting.	Actuator with pneumatic operation in both directions.
SR = Spring return.	Actuator with spring return. RCG90 has 1 piston. RCG100 has 2 pistons.

LUBRICATION

RCG actuators are permanently lubricated and additional lubrication is normally not required. However, for actuators performing 100.000 operation cycles or more under very heavy load, an oil mist lubrication is recommended.

Oil mist lubrication requires a mineral oil type ISO VG32 class 1 for usage in temperature range –10° to +70°C. Oil mist lubricator must be set at lowest possible value. Commenced oil mist lubrication must continue. If the actuator is equipped with pneumatic or electro-pneumatic positioner, oil mist must not be used.

OPERATING MEDIUM

The air or inert gas to be used must be filtered to 50 µm particle size or less. If the operating temperature is below +5°C, the air dew point must be below the application temperature. The exhaust air must pass through a filter silencer before it is let out into a workshop.

The spring houses on SR actuators which normally "breath" through the right port, ***must not be in connection with corrosive atmosphere.*** Our technicians will show a suitable method to avoid this.

HAND OPERATION

WARNING!

It is practically impossible and very risky to try to operate the actuator manually by using the key grip on the driving shaft. The accumulated energy inside the actuator may instantaneously be set free.

The actuator can be equipped with handwheel for manual operation, RC-M1, see information leaflet No 372. Other methods are available on request.

WARNING!

All manual operations must be carried out using a vented actuator.

THE PRINCIPLE AND APPLICATION OF THE SCOTCH YOKE CONSTRUCTION

The Scotch Yoke of the RCG actuators has angled slots. Thus the output torque can be given different values depending on how the pistons are mounted in the actuator.

As standard the DA actuators are mounted as shown on Dwg. 1. This design allows for highest torque at "closed" valve position. The pistons are then in their outermost position and can be fine adjusted ±3°.

The SR actuators have the pistons rotated 180° in relation to the DA actuators according to Dwg. 3. This gives an increase of the torque towards the end of the rotary motion, although the spring force is diminished.

When the pistons in an SR actuator are mounted according to Dwg. 1, the function is changed from "spring closes" to "spring opens". The adjustment of the end position will then take place in "closed position".

If the pistons in a DA actuator are mounted according to Dwg. 3, the fine adjustment will take place in "open" valve position. The actuators can be supplied with adjustment in both end positions on request. The possibility to turn the pistons can be used in several ways in order to suit the actuators to the customer´s requirements. For further information on this, please consult factory.

INSTALLATION AND ADJUSTMENT

WARNING!

RC actuators must only be used as 1/4-turn actuators on valves. Levers, racks and similar cannot be used to transmit movement without protective equipment.

All types of actuators can be mounted in various positions, e.y. vertical or horizontal. When mounting on a valve, ensure that the actuator shaft and the valve stem are centered, and that a play of ca. 2 mm exists between shaft and driving bush. After mounting it may be necessary to adjust the turning angle of the actuator.

Tightening torques for lock nuts on page 3.

As mentioned previously, the DA actuators can, as standard, be adjusted in "closed" valve position and the SR actuators in "open" position. The adjustment occurs by loosening the lock nut on the end plate and turning the set screw clockwise for reduced and anti-clockwise for increased rotary motion. The adjustment degree is ±3°C.

RCG100 has two adjustment screws. ***It is important that <u>both</u> screws are in contact with the piston in question.***

WARNING!

Pinch risk in the valve opening when test running non-installed valves.

INSTRUCTION Nr 362

DA-actuator from above

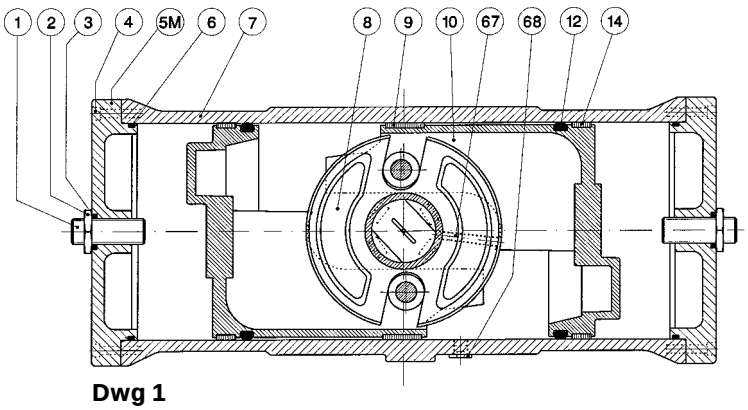

Dwg 1

Top side

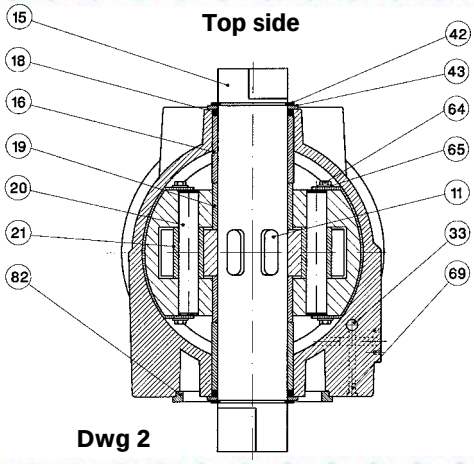

Dwg 2

SERVICE OF RCG90–100

WARNING!

Before dismantling, check that the compressed air and possible power supply are disconnected. Dismantling of SR unit: See instruction on page 4. Dismantling of SR unit with manual operation unit type M1: See instruction 369.

Exchange of O-rings to pistons and support elements

A strong screw vice and suitable lifting device are necessary for the work below.

1. *Please read the warning above!*
2. Dismantle the actuator from the console.
3. Dismantle the end plates (5M) and (5U) (not pictured) or the spring house (26).
4. Fasten the actuator shaft between soft jaws in a vice and turn the actuator until the pistons reach the cylinder end. Then place a few rods in the holes on the back side of one piston. By pressing together and pulling these rods simultaneously, the piston is dismantled from the cylinder.
5. If the piston O-ring (12) is worn, it must be replaced
6. Replace the support ring (14) if it is worn.
7. Replace the support element (9) if it is worn.
8. Grease the cylinder surfaces with a high quality grease, for instance a ball bearing grease.
9. Mount the end plates and adjust the shaft turning angle.

Exchange of shaft sealings and bearings

The shaft bearings (18) and the bearings (16) can easily be replaced.

1. *Please read the warning above!*
2. Dismantle the actuator from the console.
3. The spring tensioning screw (28) , 1 or 2 pcs, on SR actuators is turned anti-clockwisee until the whole spring force is unloaded.
4. Dismantle the seeger locking device around the shaft.
5. Dismantle the worn details. The bearings are dismantled by boring, threading and pulling with fitting screws.
6. Use a high quality lubrication grease when mounting, for instance a ball bearing grease.
7. Fit the new bearings.
8. Fit new washers under the seeger locking devices.
9. ***Fit the new seeger locking devices with the rounded inner edge towards the centre of the actuator. Do not stretch them more than necessary.***
10. ***Check that the seeger locking devices are tightly fitted without play in their grooves.***
11. Adjust the turning angle with screws (28) on SR actuators.

Converting to SR actuators

All DA actuators can be changed into SR actuators by adding spring conversion kits according to the following instructions:

1. *Please read the warning on the left!*
2. Dismantle the end plates. (The description is for RCG100 which has two pistons).
3. Dismantle the pistons.
4. Mount the pistons according to Dwg. 3 on page 3. Also see the text under "Exchange of O-rings".
5. Check that the spring is correctly pre-tensioned according to the drawing below.
   The measurement A should be 228 mm.

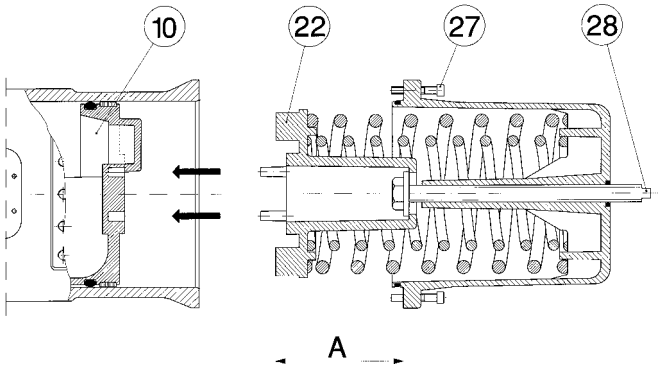

Adjustment is made with screw (28).

6. The spring guide (22) is centered towards the piston with the aid of 2 pins.
7. The SR units must be turned so that one of the three support points lies between the bosses on the piston (10).
8. Mount the SR unit when the pistons are in their innermost position.
9. Put the screws (27) in place. When tightening the screws, the spring force is transmitted from the tensioning screw (28) to these screws.

Tightening torques according to table on page 3.

10. The turning angle of the actuator is adjusted with the tensioning screw (28).

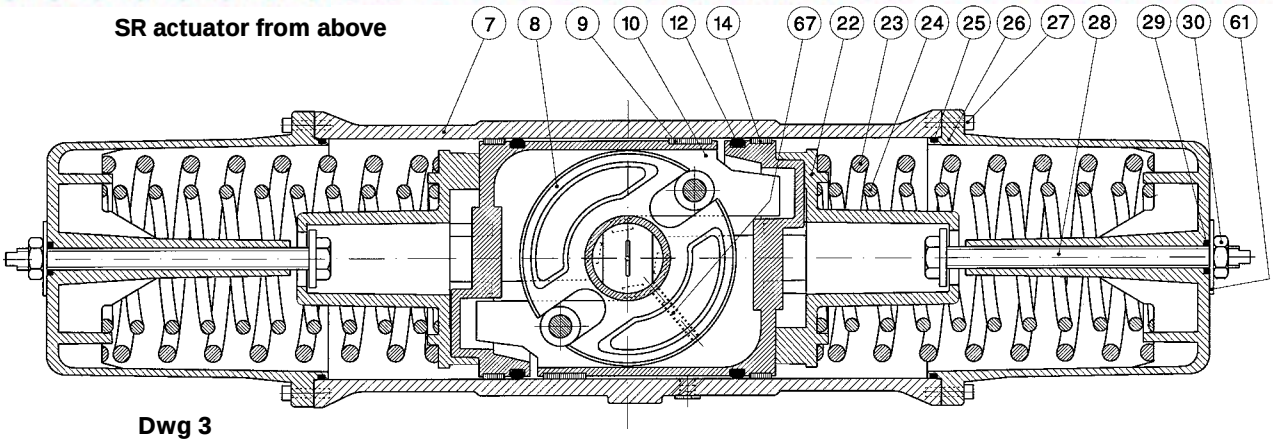

Dwg 3

Material table for RCG90–100 According to Dwg 1–3

Part No	Description	Number DA 90 DA	Number DA 100 DA	Number SR 90 SR	Number SR 100 SR	Material	Surface treatment
1	Adjusting screw	1	2	—	—	Stainless steel	Zinc plated
2	Lock nut	1	2	—	—	Steel	Zinc plated
3	O-ring	1	2	—	—	Nitrile	—
4	Screw	24	32	8	—	Steel	Zinc plated
5M	End plate with centre hole	1	2	—	—	Steel	Epoxy painted
5U	End plate without centre hole	1	—	1	—	Steel	Epoxy painted
6	O-ring	2	2	1	—	Nitrile	—
7	Cylinder	1	1	1	—	Ductile iron	Epoxy painted
8	Scotch Yoke	1	1	1	1	Steel	Tempered
9	Support element	1	2	1	2	PTFE carbon filled	—
10	Piston	1	2	1	2	Aluminium	—
11	Key	4	4	4	4	Key steel	—
12	O-ring	1	2	1	2	Nitrile	—
14	Support band	1	2	1	2	PTFE carbon filled	—
15	Driving shaft	1	1	1	1	Steel	Zinc plated and yellow chromed
16	Bearing	2	2	2	2	POM	—
18	O-ring	2	2	2	2	Nitrile	—
19	Support ring	2	2	2	2	POM	—
20	Shaft	1	2	1	2	Steel	Hardened
21	Bearing roller	1	2	1	2	Steel	Hardened
22	Spring steering	—	—	1	2	Ductile iron	—
23	Spring external	—	—	1	2	Spring steel	Corrosion protected
24	Spring internal	—	—	1	2	Spring steel	Corrosion protected
25	O-ring	—	—	1	2	Nitrile	—
26	Spring housing	—	—	1	2	Ductile iron	Epoxy painted
27	Screw	—	—	16	32	Steel	Zinc plated
28	Pre-tensioning screw	—	—	1	2	Steel	Zinc plated
29	O-ring	—	—	1	2	Nitrile	—
30	Lock nut	—	—	1	2	Steel	Zinc plated
33	Sealing plug	1	2	1	2	Steel	—
42	Circlip	2	2	2	2	Spring steel	Dacrolite
43	Support ring	2	2	2	2	POM	—
61	Marking washer, example ”80 psi”	—	—	1	2	Aluminium	Anodized
64	Screw to support element	4	8	4	8	Steel	Zinc plated
65	Washer to No 64	4	8	4	8	Steel	Zinc plated
67	Stop screw	2	2	2	2	Steel	—
68	Plug in DA end plate + cylinder	2	3	1	1	Steel	Zinc plated
69	Plug	1	1	1	1	Steel	Zinc plated

Tightening torques in Nm, bottom side of actuator
The actuators must be screwed onto the console with the correct torque in order to remain stable during operation. Please use as long screws as possible without the threads grounding.

M16: 190 Nm
M20: 370 Nm

Resistance class min. 8.8. Lightly oiled screws.

Number of screws for the bottom side of the actuator
Example: An RCG100-DA which is used at 10 bar pressure needs 10 pcs M20 screws in order to transmit the full torque.An RCG90-DA needs under the same conditions 8 pcs M16 screws.

Other tightening torques:

Retaining screws, end plate: 78 Nm
Lock nut, DA end plate: 150 Nm
Lock nut, SR housing: 100 Nm

Instructions for dismantling of RCG90–100-SR actuators

RCG90

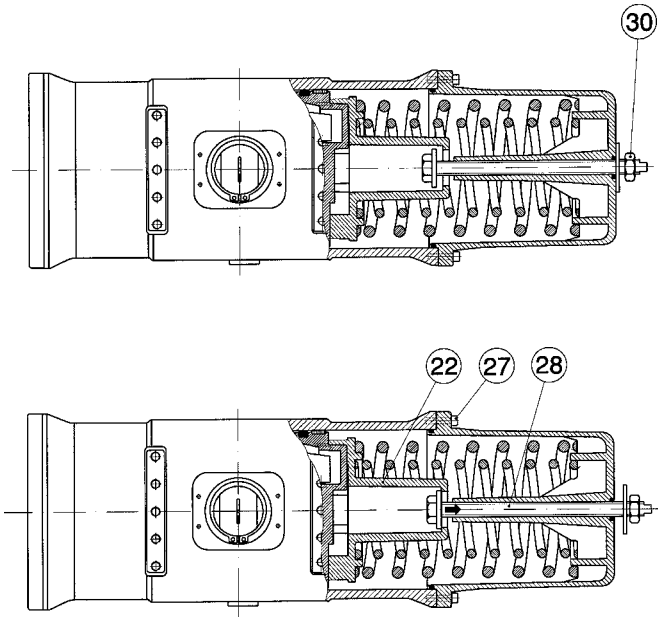

WARNING!

This procedure must be followed for safe dismantling of pretensioned spring housings.

1. Check that the springs can press the piston into starting position according to picture on the left.
2. The actuator must be pressureless.
3. Disconnect possible power supply.
4. Loosen the lock nut (30).
5. Turn the spring tensioning bolt (28) anti-clockwise until it lies lightly against the spring steering (22) .
6. Dismantle the spring housing by loosening the screws (27) .
7. Dismantling must be carried out with the utmost care. In the case of the slightest uncertainty – contact the supplier!

RCG100

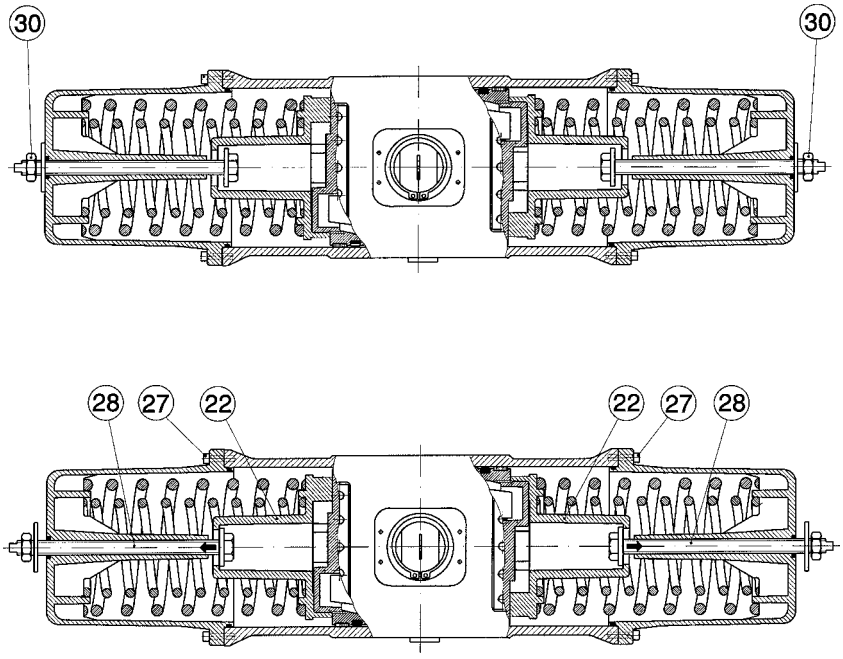

WARNING!

This procedure must be followed for safe dismantling of pretensioned spring housings.

1. Check that the spring can press the pistons into starting position according to the picture on the left.
2. The actuator must be pressureless.
3. Disconnect possible power supply.
4. Loosen the lock nuts (30).
5. Turn both spring tensioning bolts (28) clockwice until they can be turned without force.
6. Turn the left-hand spring tensioning bolt anti-clockwice until it lies lightly against the spring steering (22) and dismantle the left-hand spring housing by loosening the screws (27).
7. Dismantle the right-hand spring housing in the same manner as the left one.
8. Dismantling must be carried out with the utmost care. In case of uncertainty – contact the supplier.

REMOTE CONTROL

Remote Control Sweden AB · Kontrollvägen 15 · SE-791 45 Falun · Sweden · Tel. +46(0)23 58700 · Fax +46(0)23 58745
rc.falun@remotecontrol.se · www.remotecontrol.se

Ref No 362 / Art No 980362